REV	ECN	DESCRIPTION	DWN	CHK	ENG	DATE
0	N/A	PRELIMINARY RELEASE	MVD	CMW	SMD	6-02

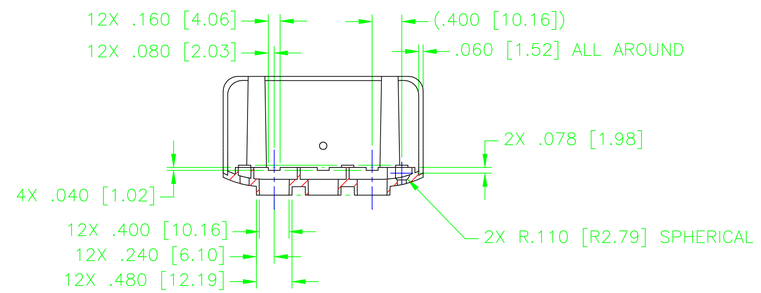

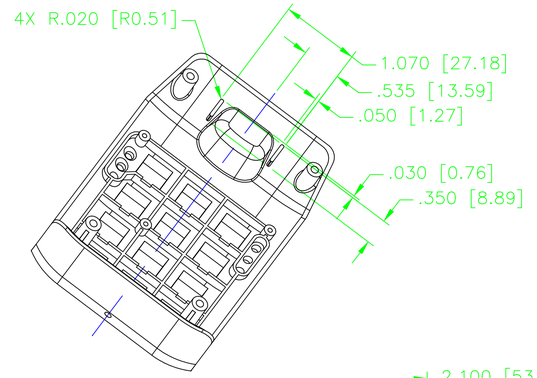

SECTION B–B

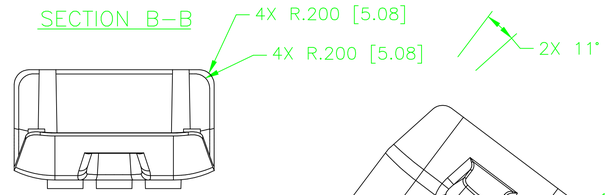

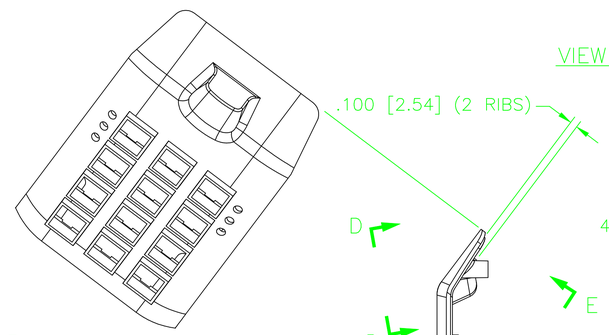

VIEW E–E

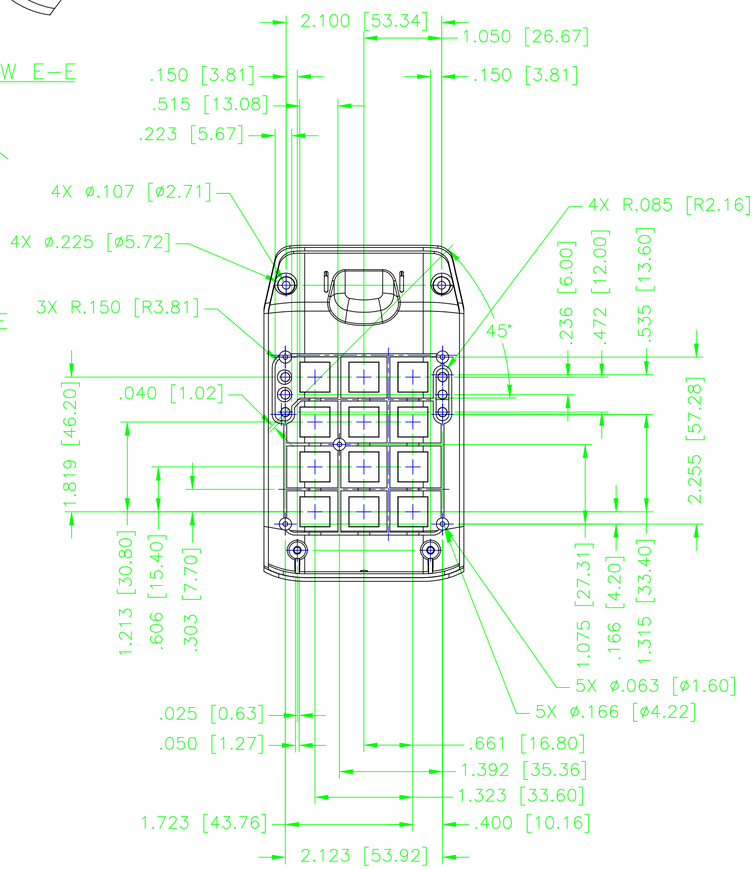

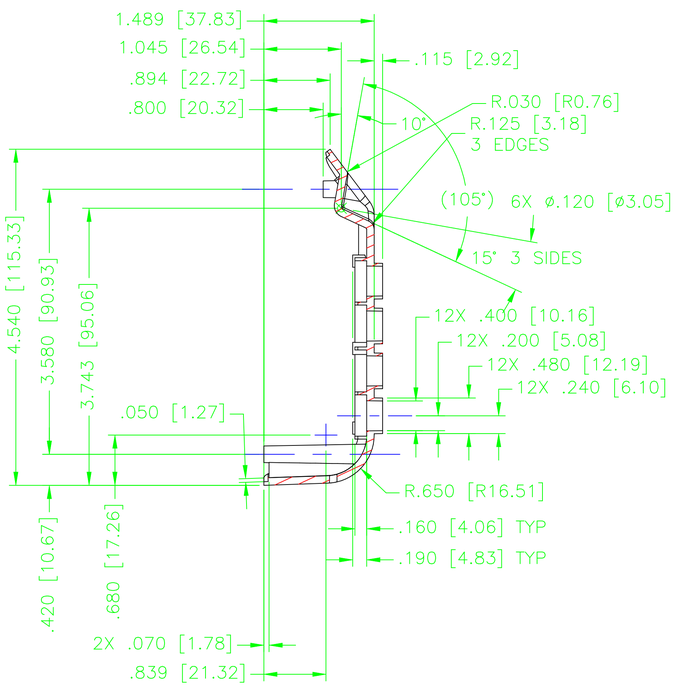

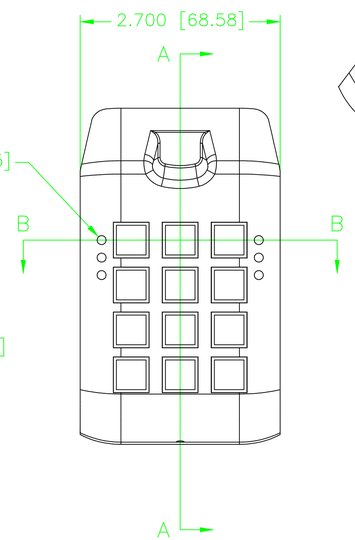

SECTION A–A

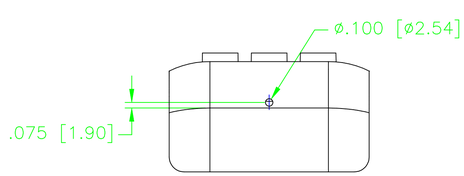

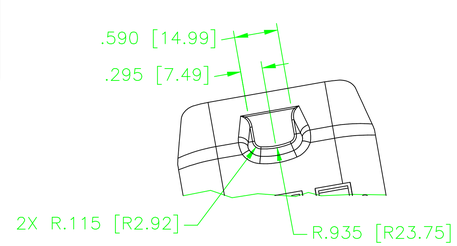

VIEW D–D

NOTES:

1. MATERIAL: GE 943 POLYCARBONATE UV RESISTANT UL RATED–94VO
   COLOR: BLACK UV RESISTANT PIGMENT.
2. FINISH: SURFACES INDICATED, MT–11020
3. UNLESS OTHERWISE SPECIFIED:
   NOMINAL WALL= .100 [2.50]
   DRAFT ANGLE= 2°
   RIB THICKNESS= .040 [1.00]

THIRD ANGLE PROJECTION	DRN. BY: MVD	6-26-02	
	CHK. BY:		
DO NOT SCALE DRAWING	DES. ENG. D.E.S.	6-26-02	CUST. NO. IEI LS-2
TOLERANCES .XX = ±.01 .XXX = ±.005 ANGLE = ±0.5°	MECH. ENG.		PART NO. 411-5845 REV 0
	MFG. ENG.		
[MM] SIZE D SCL FULL SHT 1 OF 2	MATERIAL SEE NOTES		DESCRIPTION PLASTIC KEYPAD INSERT